TOTAL 2 EA.:
1 RIGHT SIDE
1 LEFT SIDE

SIDE PLATES

MATERIAL : .050 THICK ALUMINUM

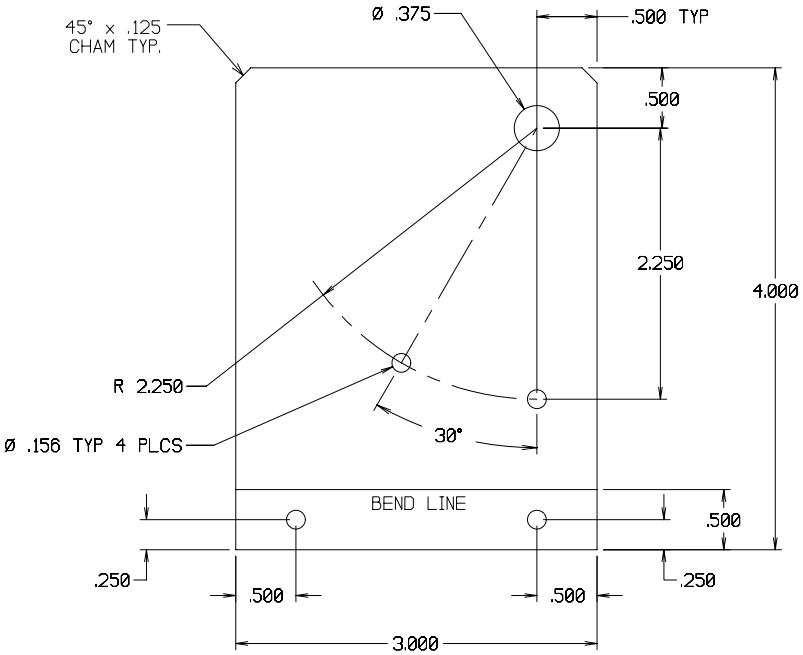

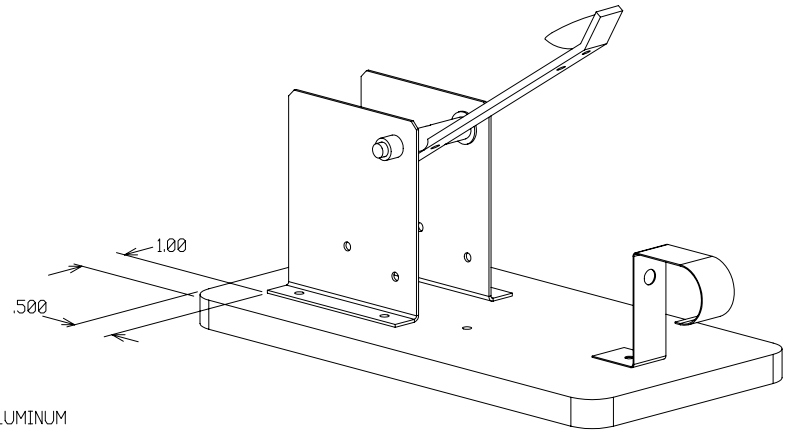

AXLE

MATERIAL : Ø3/8 ALUMINUM

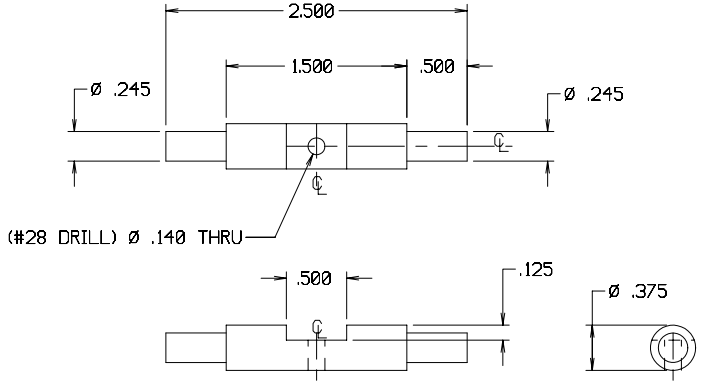

TRIGGER

MATERIAL :
STRAPPING .75" WIDE x .020 THICK
5.50" TOTAL LENGTH

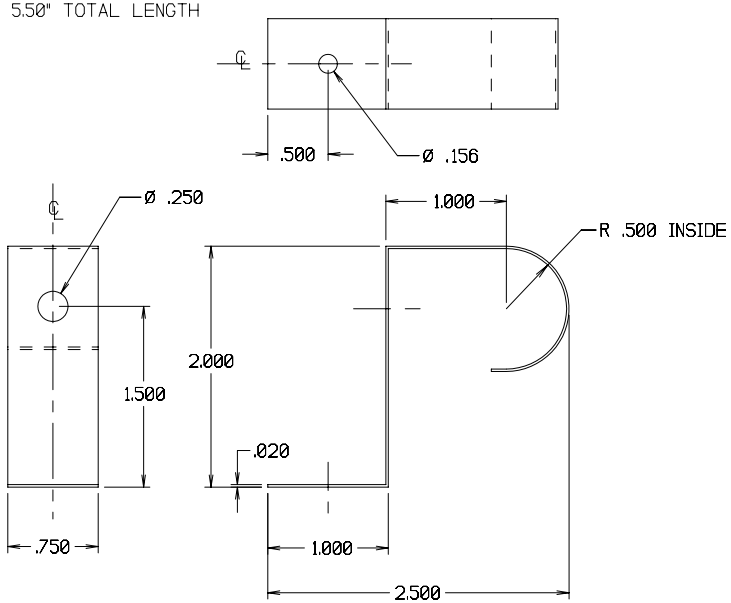

ARM

MATERIAL : 3/16 x 1/2 ALUMINUM

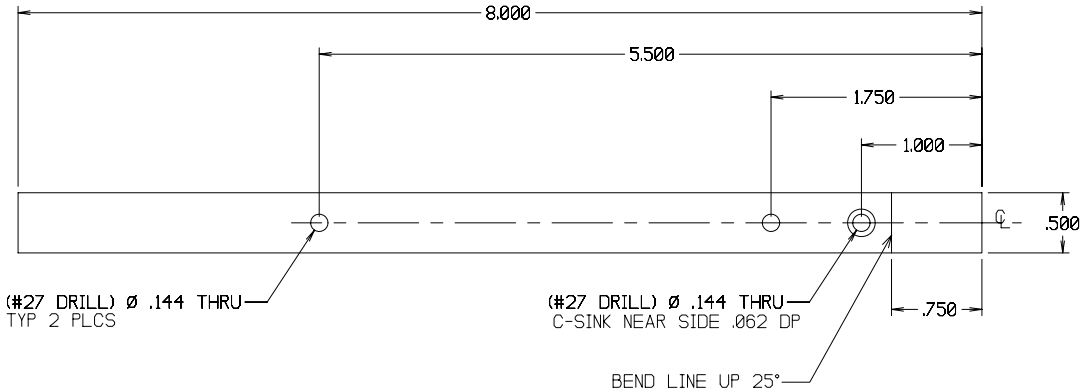

C A C T
TECH - EXPLORER
CATAPULT